Magnetic Field Gradient Cancellation for a Pumping Cell outside EBIS

Charles Epstein

Abstract

The fringe fields of the Electron Beam Ionization Source (EBIS) at RHIC are strong enough to allow polarization without additional coils. However, the field contains strong gradients that can depolarize the atoms. A cancellation scheme is proposed that reduces the gradients enough to prevent significant depolarization; an average depolarization time of 10^2 seconds is desired and found.

Coil Design

Since a longitudinal field is necessary for polarization, the pumping cell is aligned along a field line. A transverse gradient across the pumping cell then exists. In order to cancel this, a rectangular coil is placed on the same axis as the pumping cell. Thus the longitudinal direction of the field is maintained, as is the approximate magnitude of 0.08T. A program was developed to calculate depolarization times across a pumping cell. Running this program provided a number of possible configurations of coil location and geometry that allow the necessary depolarization times.

One possible configuration (Fig. 1) places the pumping cell 158cm behind the center of EBIS, and 84cm above. At this location, an angle of 11.3 degrees relative to the vertical is necessary. The coil (Fig. 2) is rectangular with dimensions 45cm by 50cm. The coil is located 13cm in front of the pumping cell. The coil cross section is a 5cm square with a current density of 240 A/cm^2 (1500 A/in^2); the total current is 6,000A. This is low enough to allow air coiling. The average depolarization time is approximately 757 seconds, with a median of approximately 667 seconds. With increased current, other configurations can be found with better depolarization statistics, however water cooling may be necessary.

In Fig. 3 and Fig. 4, the transverse components of the fields are shown in order to provide a visual for how the field gradients cancel.

In Fig. 5, the magnitude of the transverse gradients across a transverse slice of the pumping cell is plotted. The deviation between the highest and lowest values is approximately 2.6%, indicating a reasonably uniform gradient.

Figures

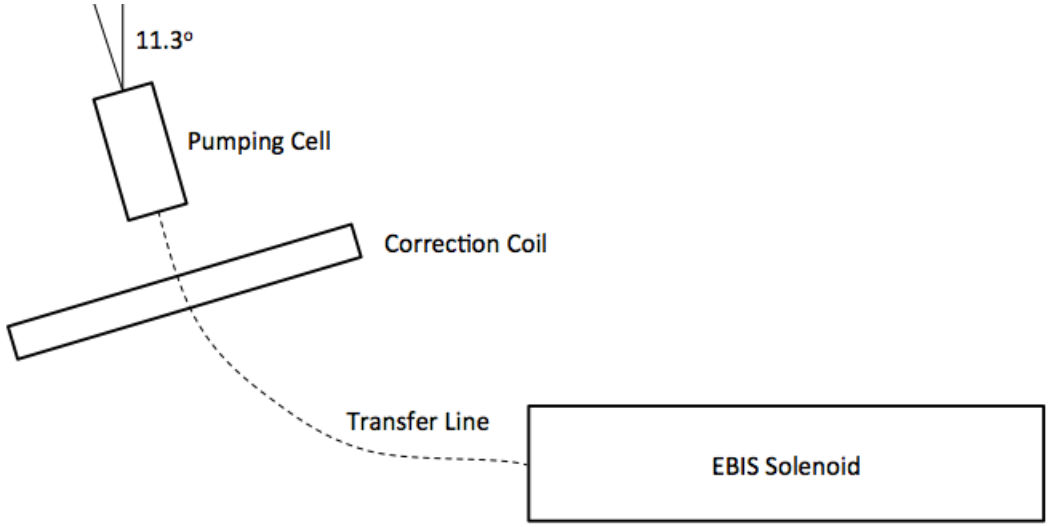

Fig. 1: Setup schematic (not to scale)

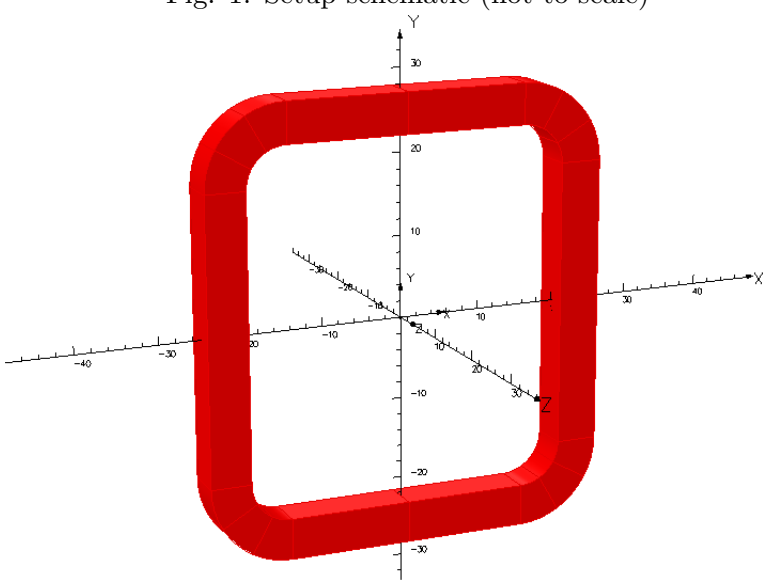

Fig. 2: Correction coil visualized in VectorFields Opera software

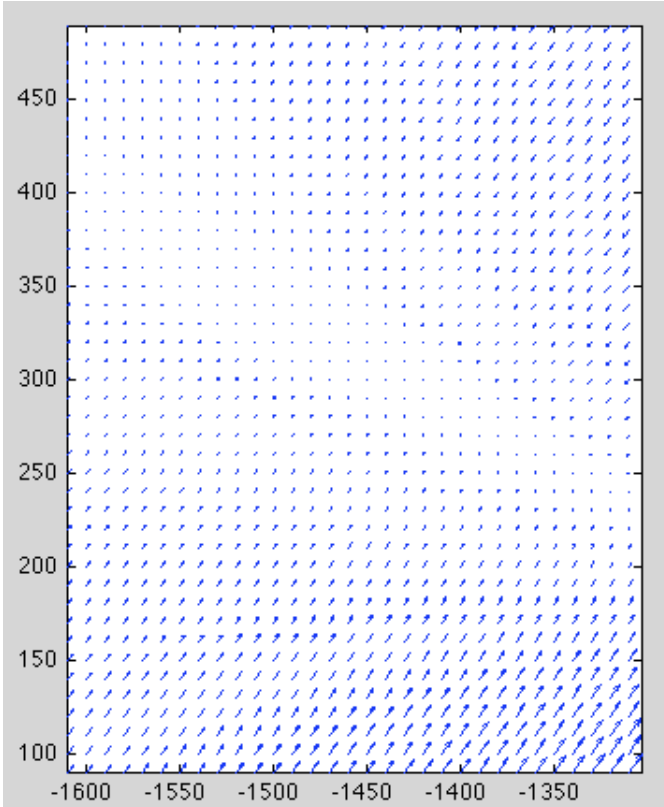

Fig. 3: Plot of the transverse components of the EBIS field at a possible cell location

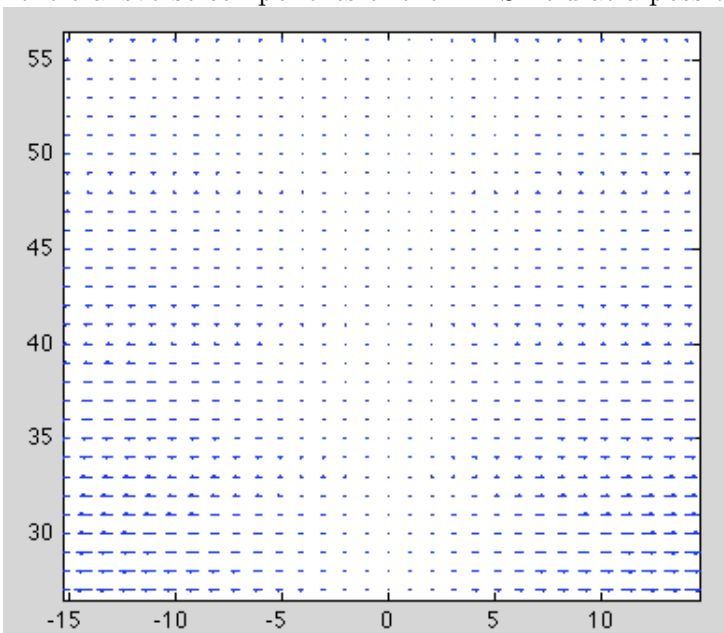

Fig. 4: Plot of the transverse components of the coil field.

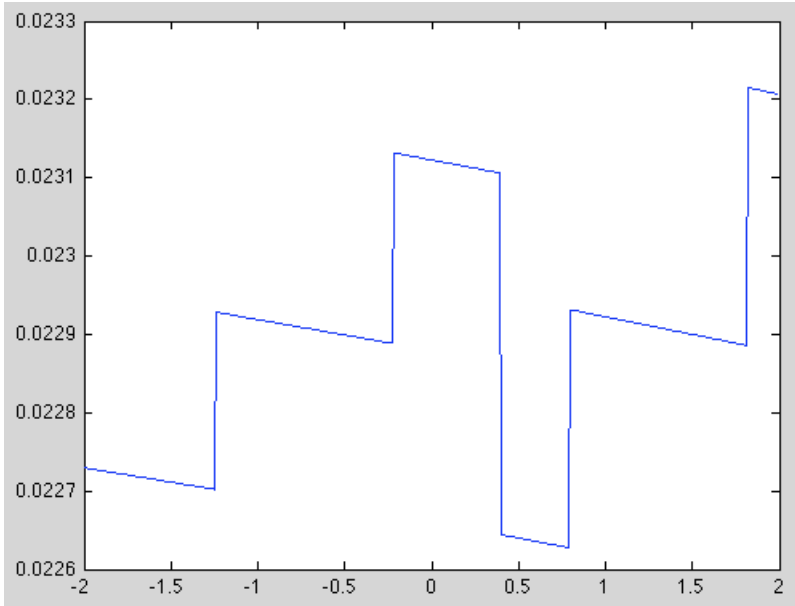

Fig. 4: Plot of the transverse gradient magnitude across a pumping cell slice. Units in T/m on y-axis, cm on x-axis